www.tamel.pl

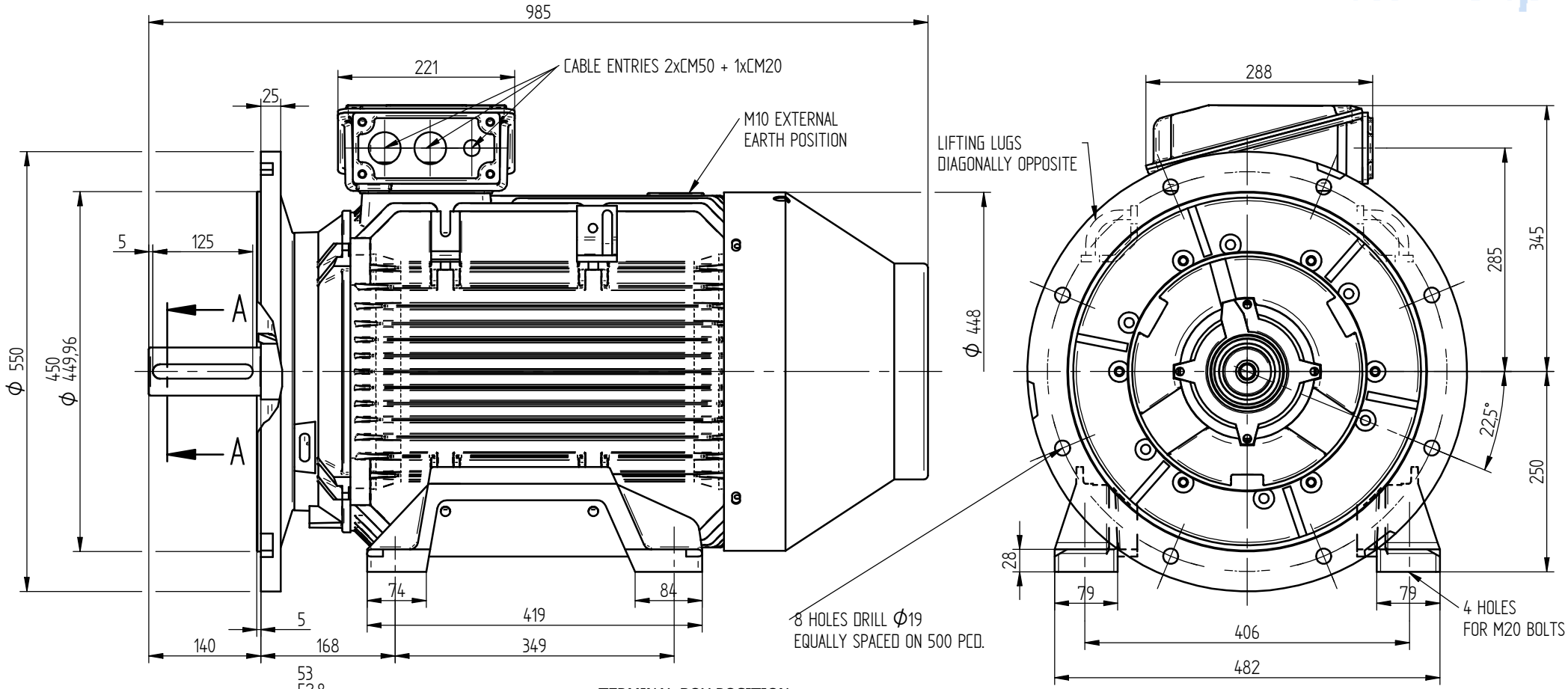


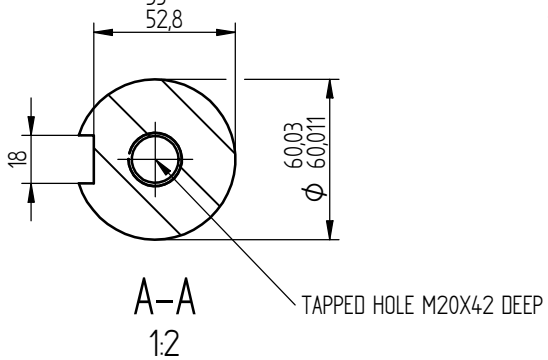


TERMINAL BOX POSITION:
- CAN BE ARRANGED AT EITHER 9, 12 OR 3 O`CLOCK.
- STANDARD TERMINAL BOX POSITION IS 12 O'CLOCK AS SHOWN.CONDUIT ENTRIES
- TERMINAL BOX CAN BE ROTATED AT 90° INTERVALS
(CONDUIT ENTRY POSITION SHOWN FOR ILLUSTRATION ONLY).

ALL DIMENSIONS IN MILLIMETERS

FIRST ANGLE PROJECTION

BROOK CROMPTON

Produced by Tamel S.A. a company of NTB

| | | | |
|---|---|---|---|
| SHEET SIZE A3 | TITLE: OUTLINE DIMENSION DRAWING W CAST-IRON TOTALLY ENCLOSED FAN COOLED W-UDF250M_E FRAME FOOT & D FLANGE MOUNTED MOTOR, 2P | | |
| | | NAME | DATE |
| | DRAWN | JS | 2014-02-21 |
| | CHECKED | | |
| | SCALE | 1:5 | |

DRG. No.

DRG. REF.

REVISION: DATE: